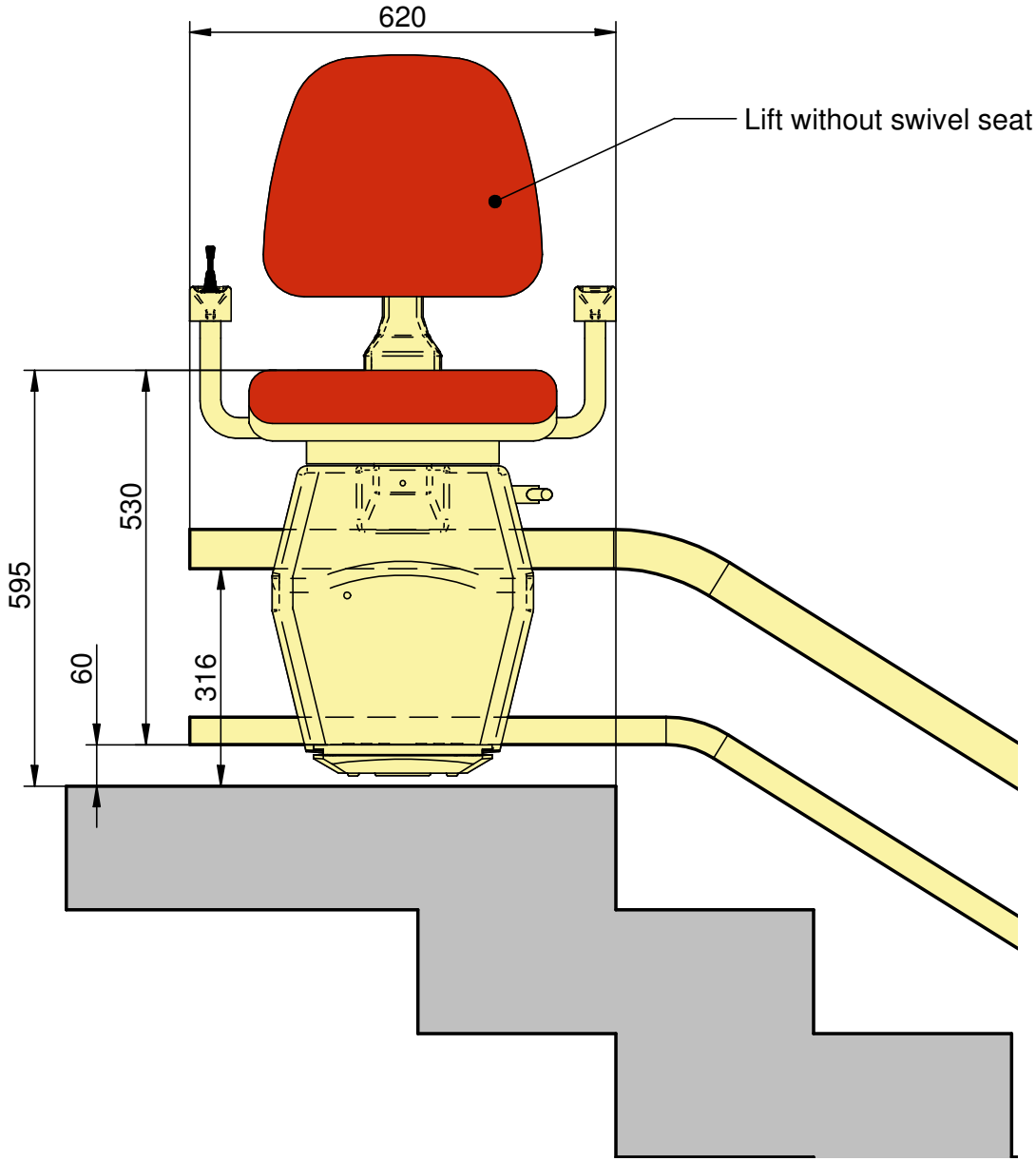
620
Lift without swivel seat
595
530
60
316

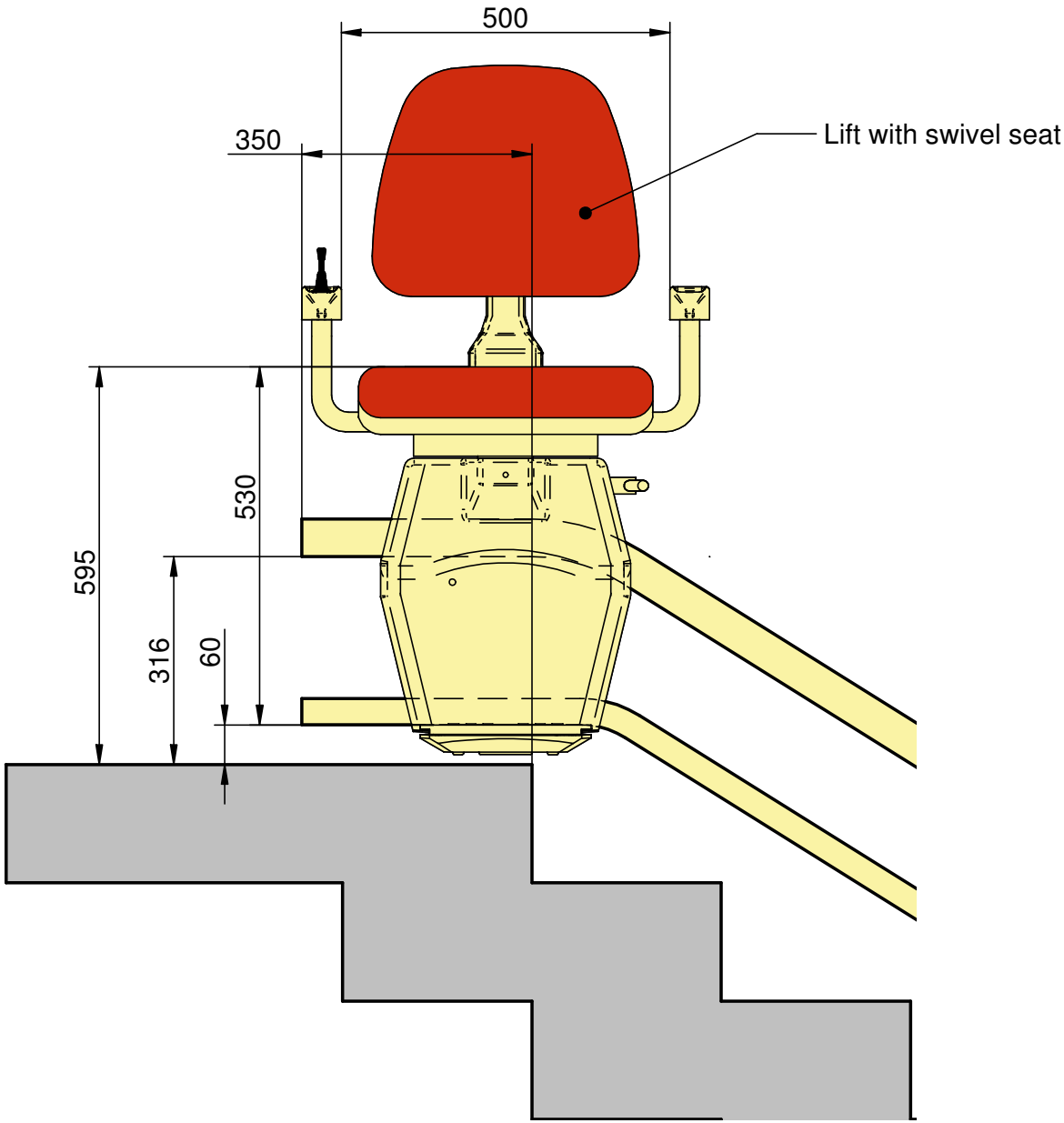
500
350
Lift with swivel seat
595
530
316
60

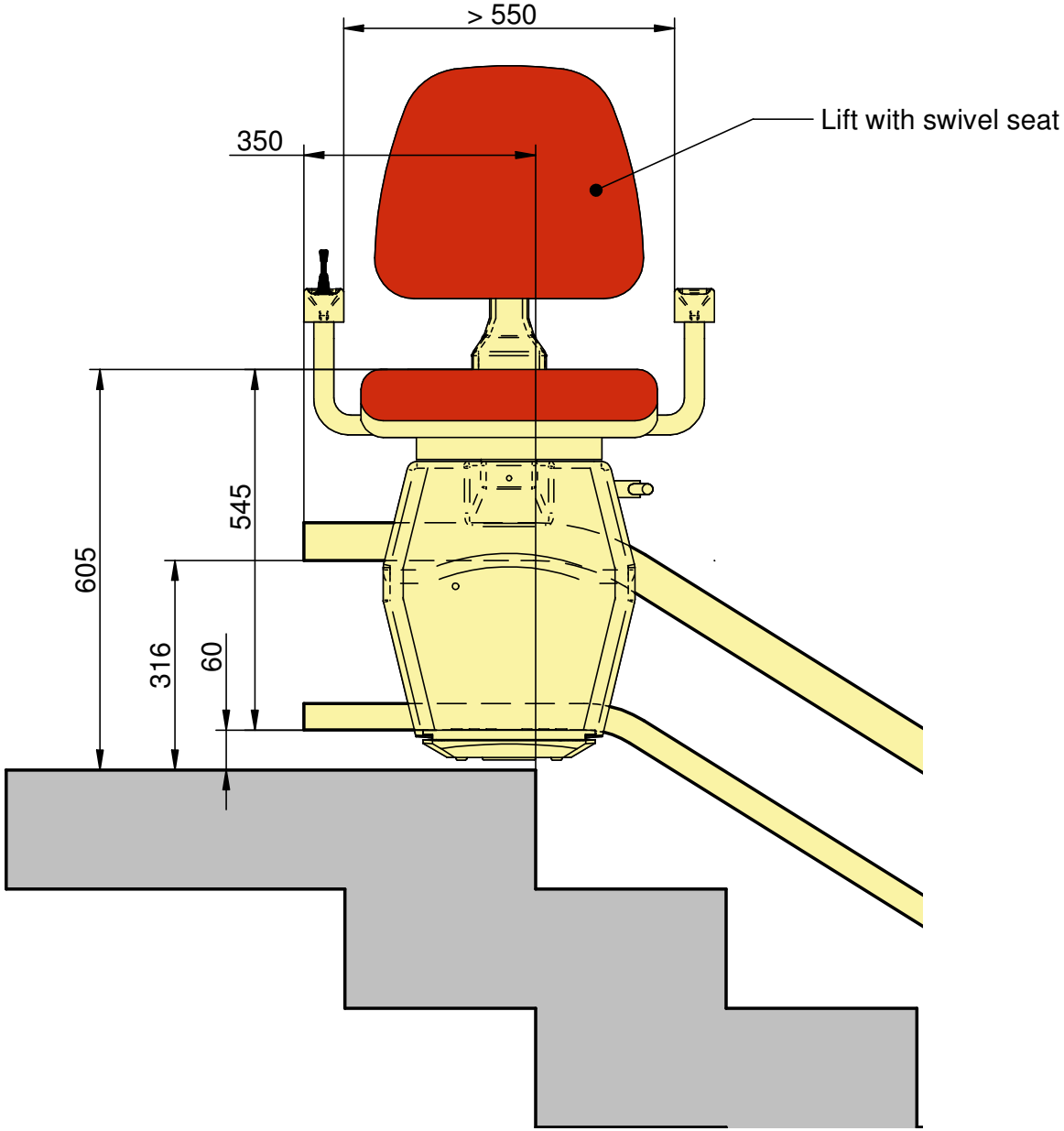
> 550
350
Lift with swivel seat
605
545
316
60

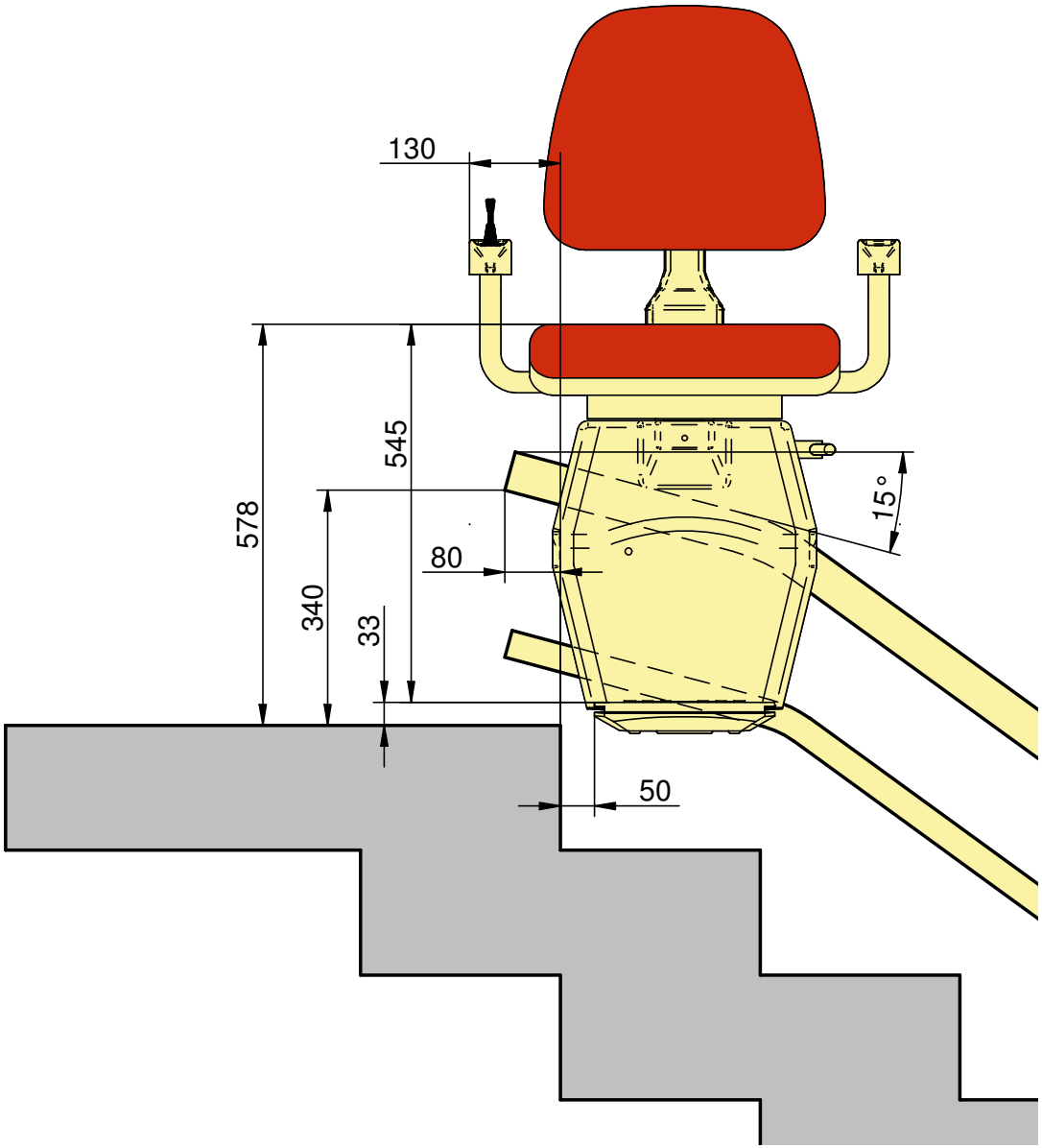
130
578
545
340
33
80
15°
50

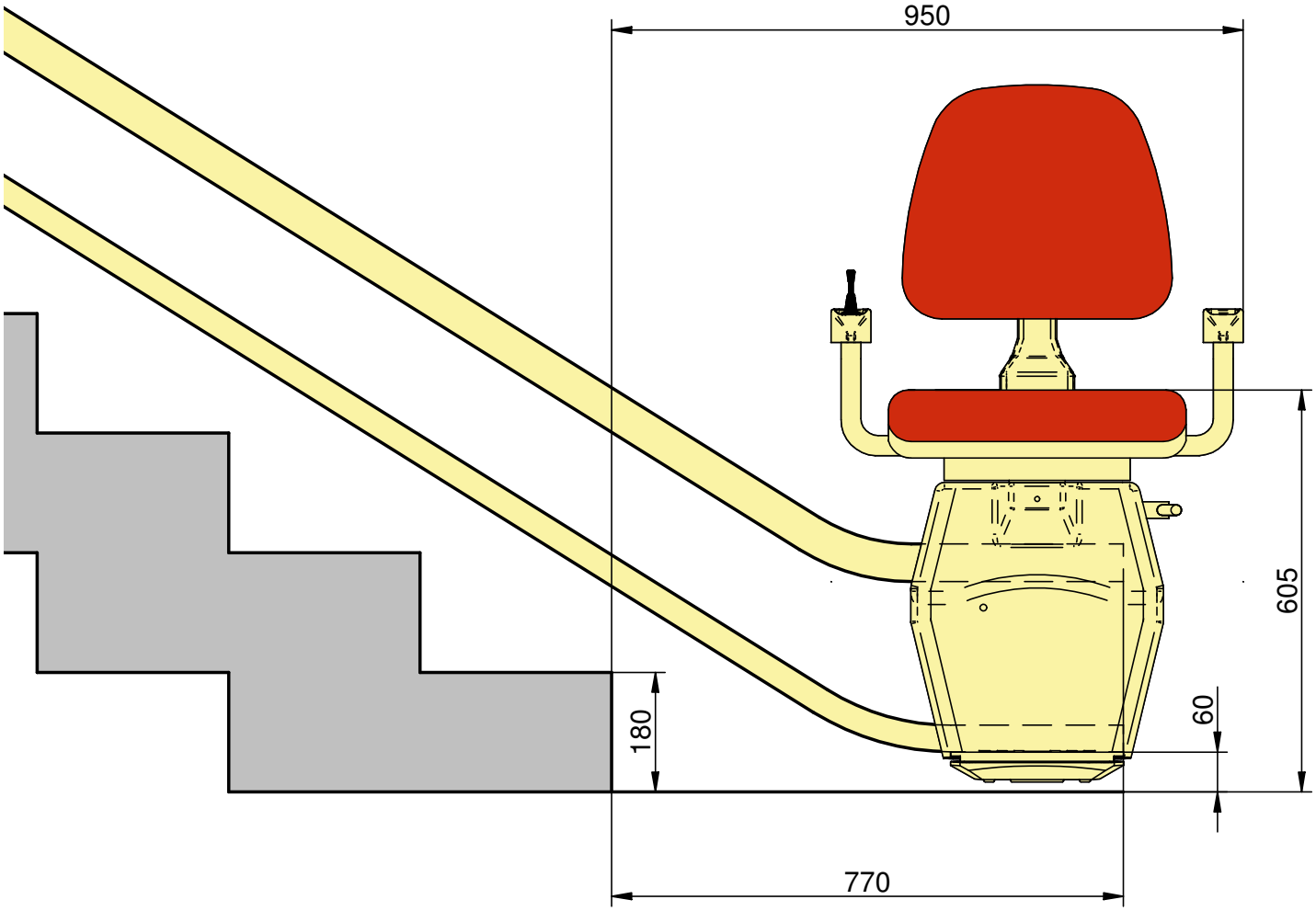
950
605
60
180
770

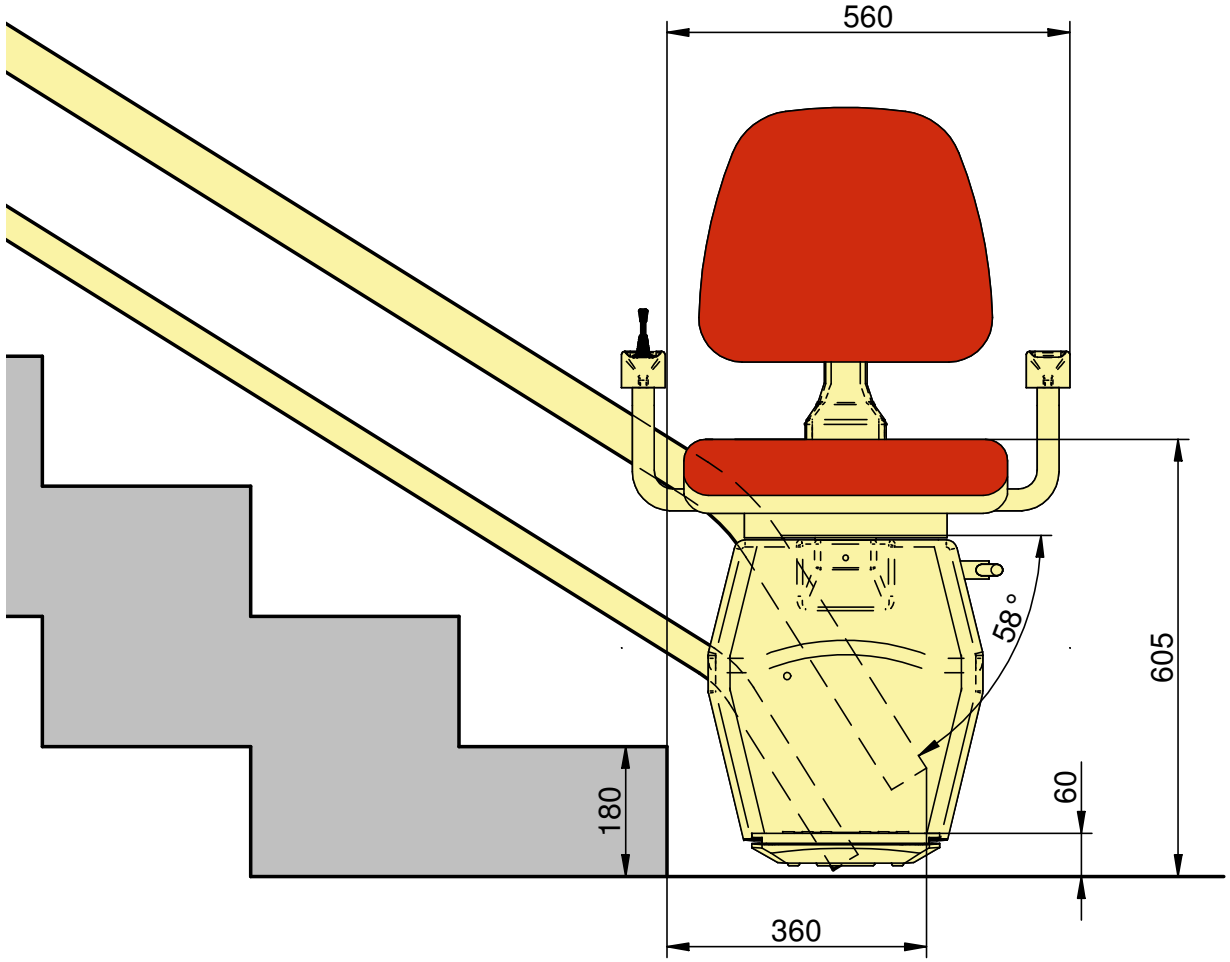
560
58°
605
60
180
360

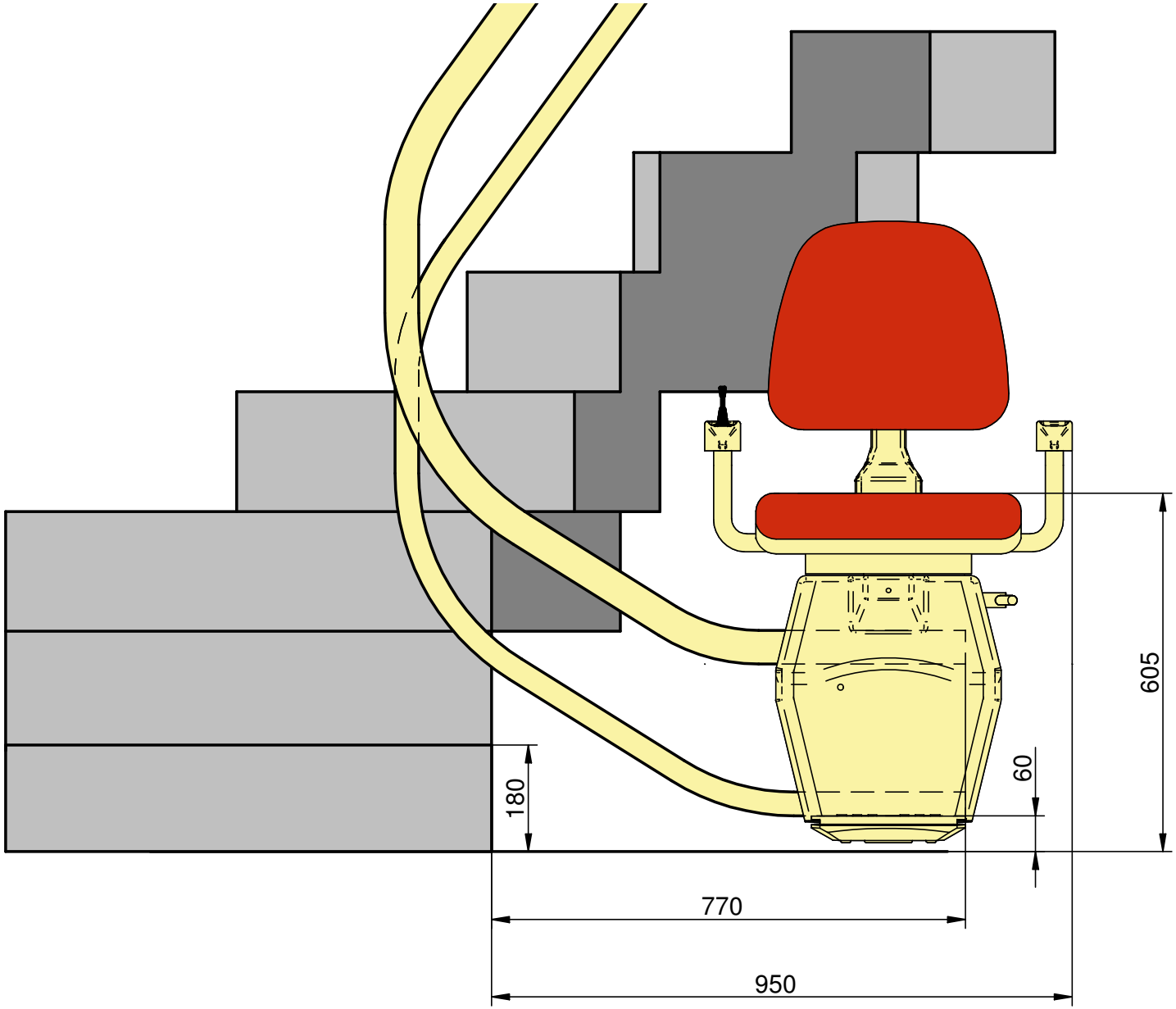
605
60
180
770
950

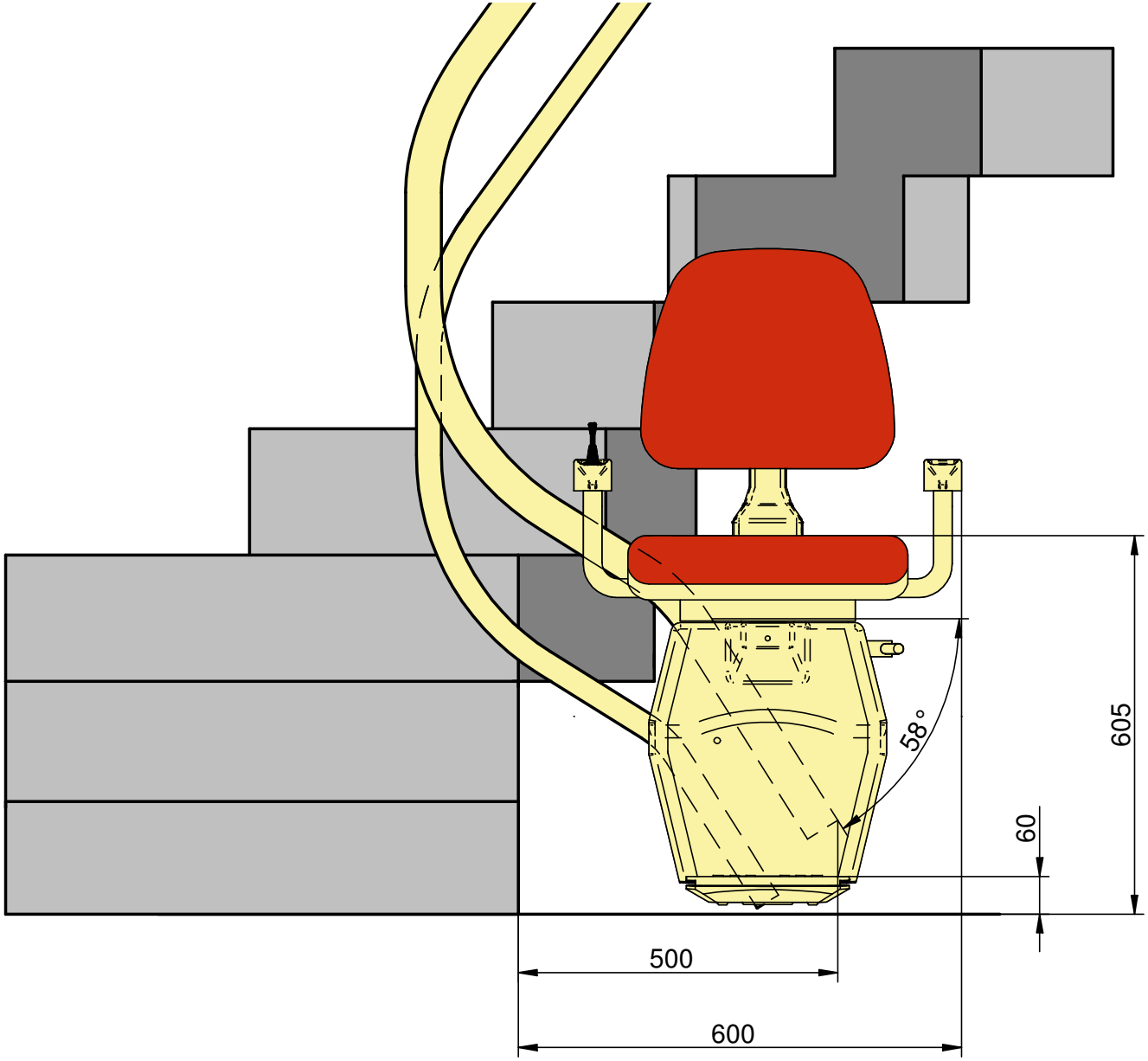
58°
605
60
500
600

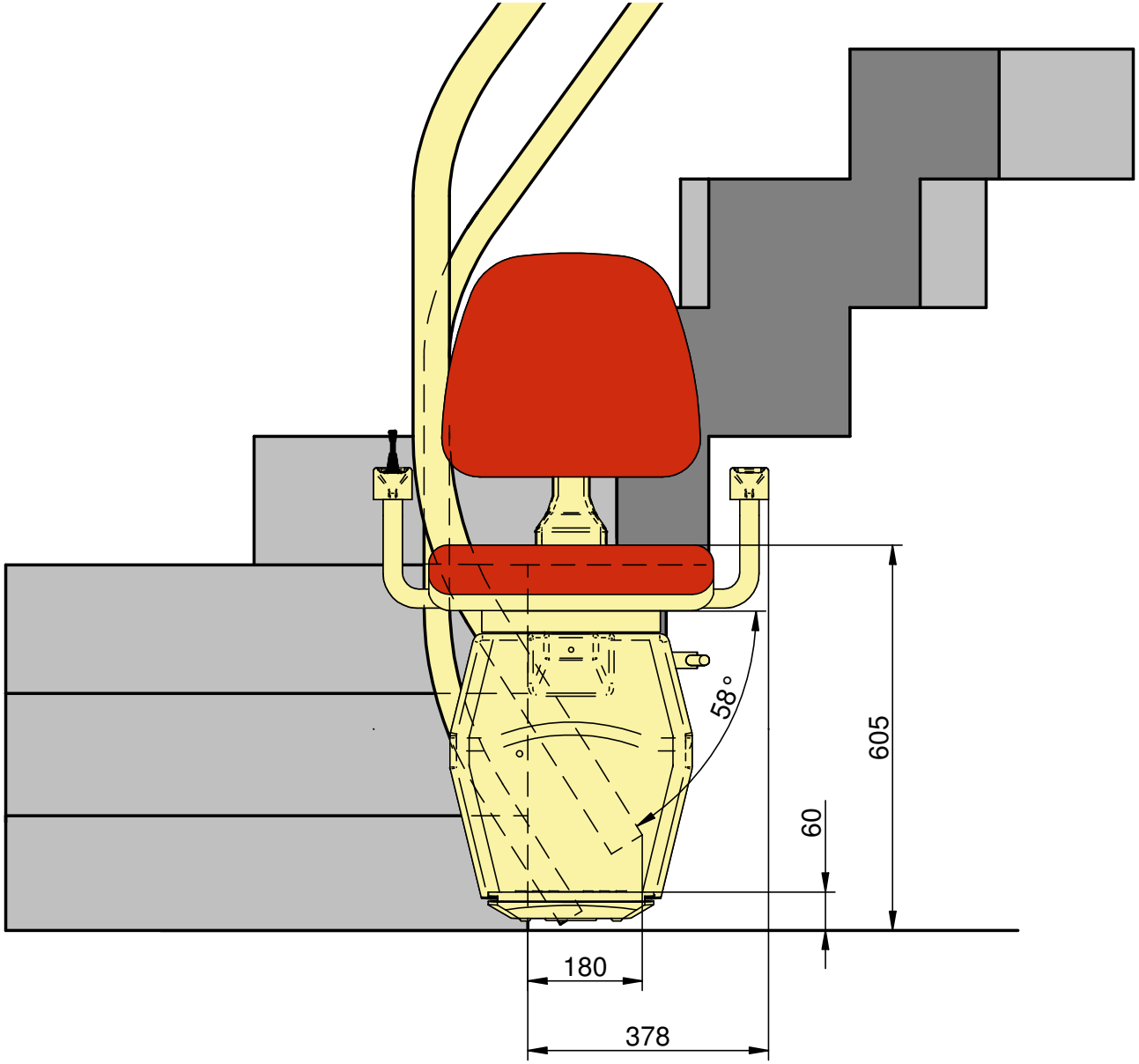
58°
605
60
180
378