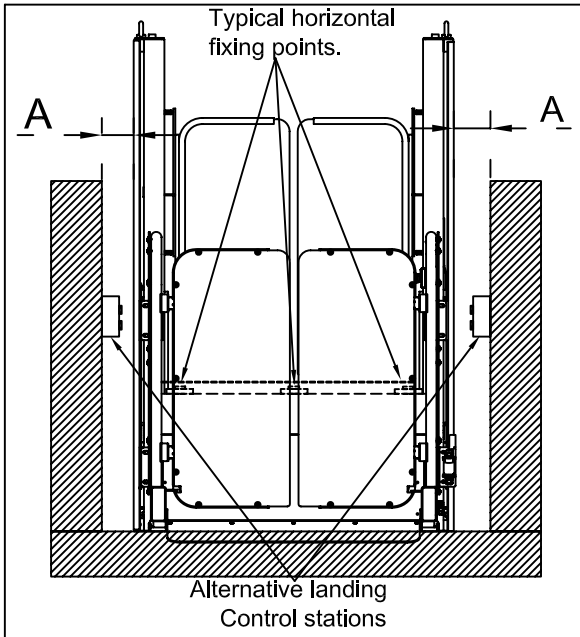

Clearances:

"A" = Horizontal distance to adjacent surface 100mm if smooth, 325mm if irregular

Anchors
Horizontal & Vertical 3 minimum (see installation information)
for further details of substrate requirements and type

Platform Floor Finish
Standard - Aluminium Chequer Plate

Electical Supply (Main switch)
1ph L, N, PE, 3 x 2,5mm² 16A

Technical Data
Rated capacity: 300kg / 2 Persons
Speed: 0,08m/s
Drive: 2,5 kw Electrical Motor / Belt drive
Electrical Connection: Single phase, 3 x 1,5mm²
(By use of heater the cable area should be increased to 2,5mm²)
Control Voltage: 24 Volts
Soft Start / Stop by frequency invertor
Drive system: Screw / nut, dubble
Keyswitch
Powder coated RAL 7004

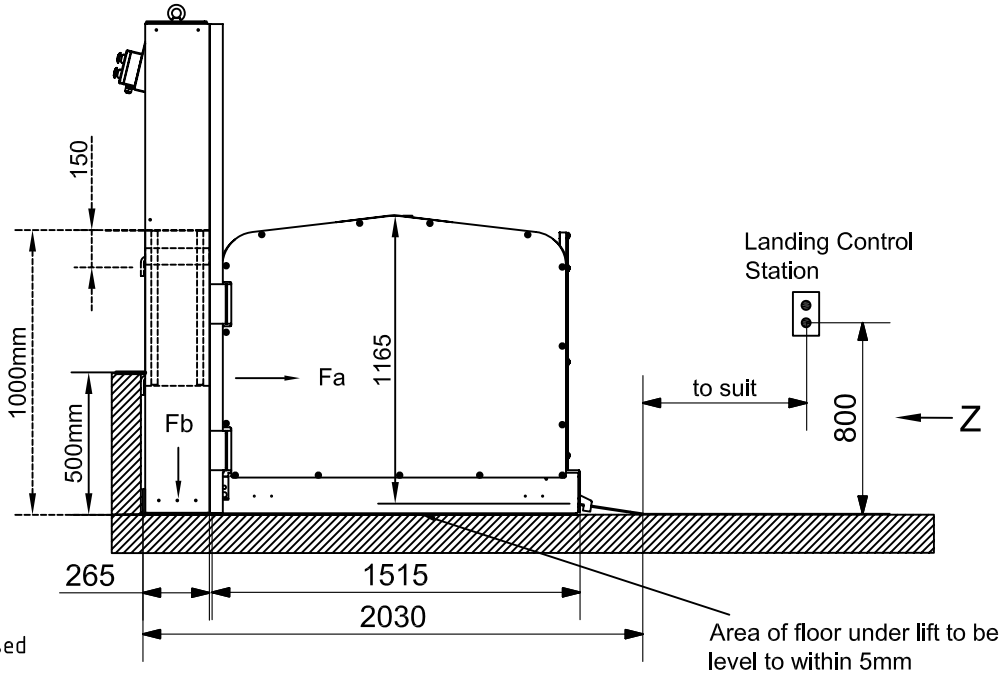

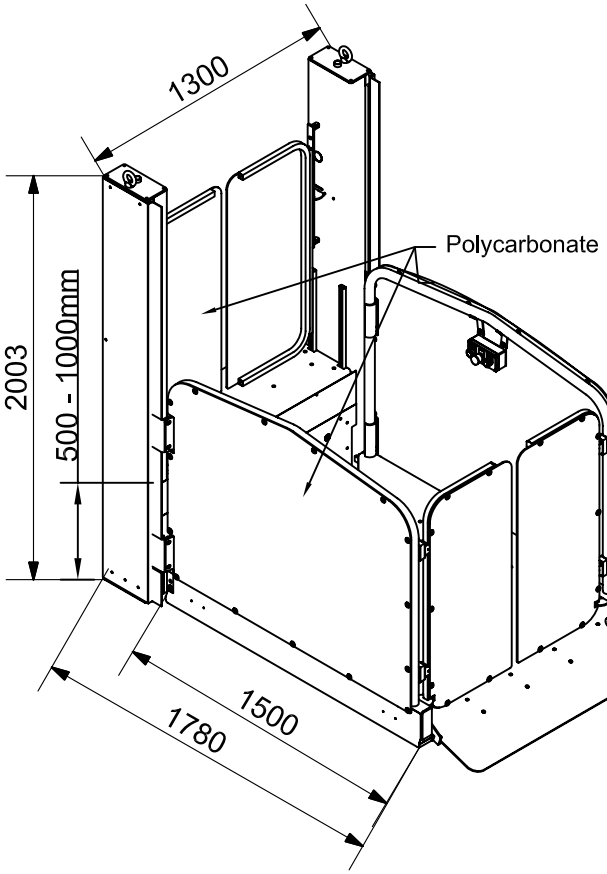

HORIZONTAL FORCES	
Fixing height mm	TOTAL ANCHOR Fa. kN
500	19.5
600	17.0
800	14.5
1000	11.0

Fb = Vertical force of 10kn, spread over area of 1300mm x 250mm.

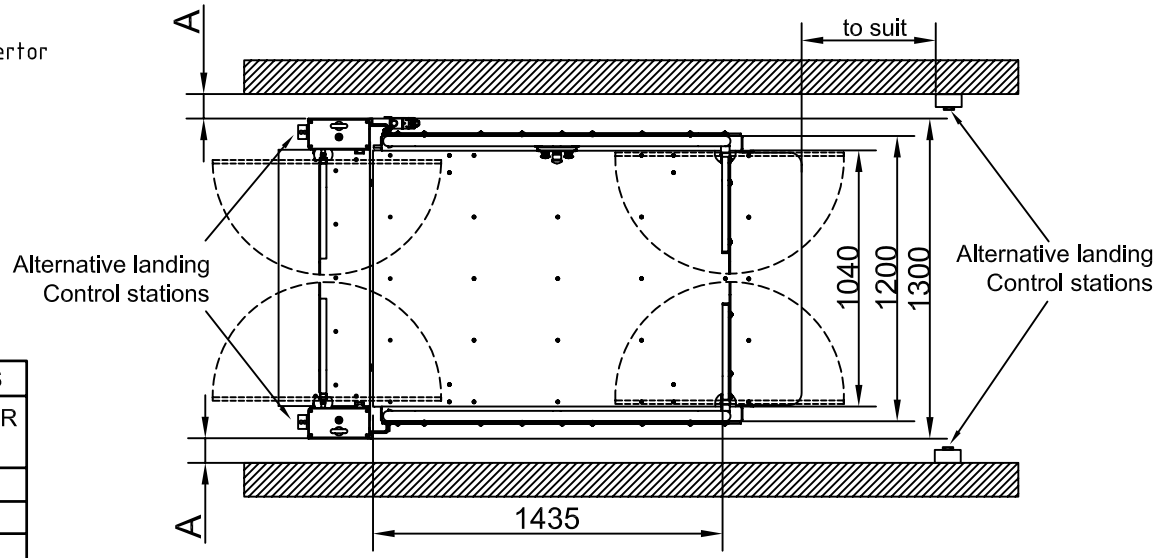

Antal	Varunummer	Namn	Material	Norm	Ref.

MPR
Ävägen 4
S-23291 Arlöv
SWEDEN
Tel. +46 40 437075
Fax +46 40 432944

Lyfthöjd: 1000mm

Mått utan toleranser enligt SMS 715 medel

	ISO 2768	0.5–3	3.1–6	6.1–30	30.1–120	121–400	401–1000	1001–2000	2001–4000
	f	±0.05	±0.05	±0.1	±0.15	±0.2	±0.3	±0.5	
	m	±0.1	±0.1	±0.2	±0.3	±0.5	±0.8	±1.2	±2
	c	±0.2	±0.3	±0.5	±0.8	±1.2	±2	±3	±4
	v		±0.5	±1	±1.5	±2.5	±4	±6	±8

Scala

	Datum	Sign.
Draw		
Check		

Datum	Revision
09.11.05	B

Title:

MID 1000

(Strategos III)

GB:
D:

Revision by:
Replacing:
Ritning nr: